utthunga
Engineering Transformation

EtherNet/IP + FDI: VALUE IN PROCESS AUTOMATION

WHITE PAPER

Published 18-04-2017

INDUSTRIAL
SOLUTIONS | SERVICES

Executive Summary

Abstract: As per the **NAMUR's** position paper on *"An Ethernet communication system for the process industry"*, NAMUR calls for protocols **IEC 61784-2 CPF2/2 'EtherNet/IP'** and **IEC 61784-2 CPF3/5 'PROFINET IO CC B'** to become minimum binding requirements for the process industry. And also it recommends FDI device packages required for **Field Device Integration (FDI)** shall be available in the devices and capable of being transmitted to central tools.

Hence **EtherNet/IP protocol and FDI Device Integration standard** is going to play vital role in the Process Automation Industries in the near future.

This paper describes research and prototype done on supporting the EtherNet/IP protocol in Device Integration Standard FDI and how it benefits EtherNet/IP device suppliers, Automation host suppliers as well as ODVA and FieldComm Group community in achieving their objective towards providing optimized solution in Process Industries.

Audience of this document includes the EtherNet/IP Instrument suppliers, System Suppliers, business and technical leaders in the process Industry who are shaping their product roadmap, technical and executive members of NAMUR, ODVA and FieldComm Group community who are defining the strategy for evolution of the Process Industry in the light of Industrie 4.0 and IIoT.

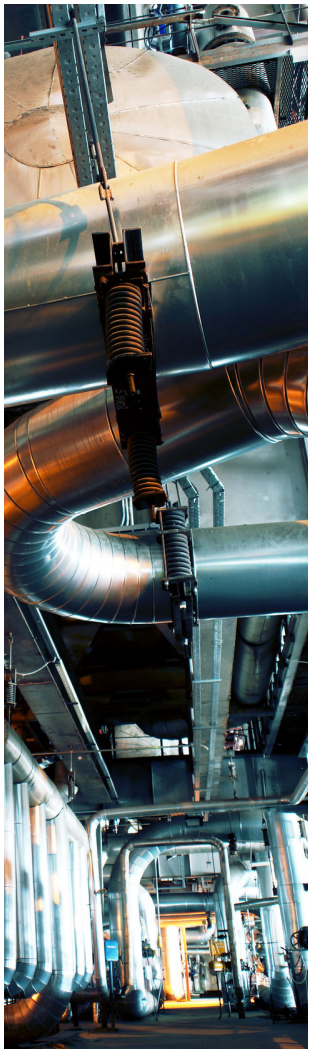

This paper also defines the role for Field Device Integration (FDI) technology in the ODVA's vision of OPI's (Optimization of Process Integration) Unified Communication Solution for the process Industries.

Table Of Content

Overview on ODVA's initiative in OPI

With its strong installation base and user experience in Hybrid and Discrete Industry, **ODVA** vision to proliferate adoption of EtherNet/IP in the process industries with its new initiative **OPI(Optimization of Process Integration)** which defines a strategic vision for manufacturers looking to maintain cost-effective, sustainable production capacity in the process industries. The approach will simplify exchange of configuration, diagnostic and production data between field devices and higher-level systems such as supervisory control and data acquisition systems (SCADA), plant asset management (PAM). Secure remote access of field installation will be enabled and plant to enterprise communication simplified. ODVA envisions an approach to the optimization of process integration that is convergent, compatible, scalable, and open for users and their suppliers.

This picture shows ODVA's technical approach to OPI's Unified Communication Solution based on EtherNet/IP and CIP. ODVA has identified 3 primary use cases for OPI

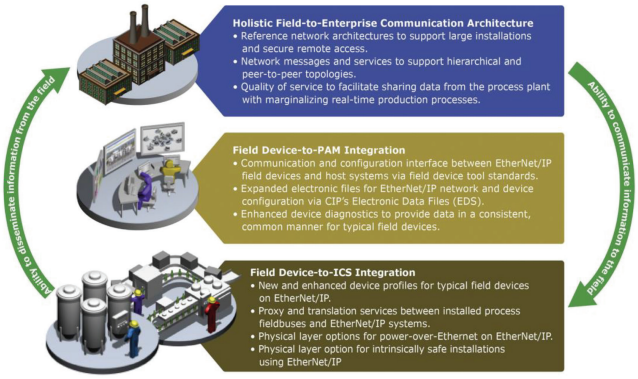

1. Field Device to ICS Integration:
This use case is the foundation of OPI. It envisions the integration of all existing installed process Fieldbus into EtherNet/IP system and communication improvements like enhanced diagnostics and instrumentation data on Industrial EtherNet. It also includes physical layer options such as Power -over-Ethernet and confirming to the emerging standards for intrinsically safe Ethernet

2. Field Device to PAM Integration:
This use case is the accelerant for OPI. It envisions that in all stages of field device life cycle from commissioning and operation to calibration and maintenance, it provides optimal performance which is very crucial for the Process Automation Industries where installations are expected to operate for long periods without shutdown.

3. Holistic field-to-Enterprise Communication Architecture:
This use case is the integrator for OPI. It envisions with a single, converged and transparent enterprise-wide communication architecture which can provide full access between the automation and enterprise resource planning that allows virtually unlimited access to data anywhere, any time. OPI will allow users to update and improve the performance and serviceability of field installations as well the integration of process applications with the overall enterprise in a safe and secure manner.

Role of FDI in ODVA's OPI

One of the primary 3 use cases of OPI is **Field Device to PAM Integration** which envisions the simplifying the exchange of configuration, diagnostic and process data between field devices and higher level systems that must be standardized, usable across all systems, and independent of device suppliers, system suppliers, or vendor-specific tools.

Existing Device Integration Standard

EDDL (Electronic Device Description Language) : EDDL is an international, **IEC-61804** standard for Device Integration. Since 1992, EDDL is the most widely used Device Integration Standard in Process Industries. EDDL is used in the Intelligent Device Management (IDM) software part of major process control systems and in portable maintenance tool to support device diagnostics, configuration, calibration, and access to internal variables of the device. EDDL is textual description and Operating System independent and can be supported in various platforms like Linux, Windows, Android etc. EDDL files are imported, not installed hence it does not affect the runtime stability of the DCS system. However, EDDL influences the presentation in the host system and has limitation in representing the complex device functionalities.

EDDL was maintained by ECT (EDDL Cooperation Team) earlier and now it is part of FieldComm Group.

Supported Industrial Protocols: HART, Wireless HART, Profibus, Profinet, FF, ISA100

FDT (Field Device Tool)

FDT is an international, **IEC-62453** open standard for industrial automation integration of networks and devices, harnessing IIoT and Industrie 4.0 for enterprise-wide connectivity. The technology enables configuration, operation and maintenance through a single, standardized user interface - regardless of supplier, device type/function or communication protocol. Most major system manufacturers today integrate the FDT Technology in their product/solution offerings and more than 8,000 devices currently employ this technology. Unlike EDDL, FDT is a software component and can offer rich graphical user interface with no limitation to depict complex device functionalities.

Supported Industrial Protocols:

16 communication protocol have been supported by FDT standard like CANOpen, CC-Link, CompoNet, ControlNet, DeviceNet, **EtherNet/IP,** EtherCAT, Foundation Fieldbus, HART,Interbus, IO-Link, Modbus, ISA100 Wireless, Profibus, Profinet and sercos.

FDI (Field Device Integration):

FDI is a Device Integration and Device Management Technology, combining base concepts and technology aspects of the **Electronic Device Description Language (EDDL)** according to IEC 61804 and **Field Device Tool (FDT®)** according to IEC 62453, as well as in IEC 62541 1 (OPC UA). Published as the **IEC-62769** standard, FDI specification is available from four owner organizations: FieldComm Group, PROFIBUS & PROFINET INTERNATIONAL (PI), FDT Group and OPC Foundation.

Supported Industrial Protocols: HART, Wireless HART, Profibus, Profinet, FF, ISA100, Generic Protocol Extension (Modbus, future protocols..)

EtherNet/IP Protocol support in Device Integration Standards

EtherNet/IP has been supported by **FDT Standard.** And adding the support for **FDI** also as the standard communication and configuration interface between the field devices supporting EtherNet/IP and host system will proliferate the **ODVA's Field Device to PAM Integration** use case.

Technical Aspects of supporting EtherNet/IP in FDI

EtherNet/IP support in FDI using GPE (Generic Protocol Extension)

FDI is built with vision of being one device integration standard for all devices of process Industry, independent of communication and manufacturer.

FDI Generic Protocol Extension (GPE) Specification has been developed with the vision of adding support for more protocols including proprietary without changing host implementation. However protocol specific definition (PSD) file needs to be specified per protocol so that FDI Communication Packages for Gateways, FDI Communication Servers and FDI Device Packages supporting such a protocol can work together in a host which is not aware about this specific protocol.

EtherNet/IP Support in FDI using GPE specification

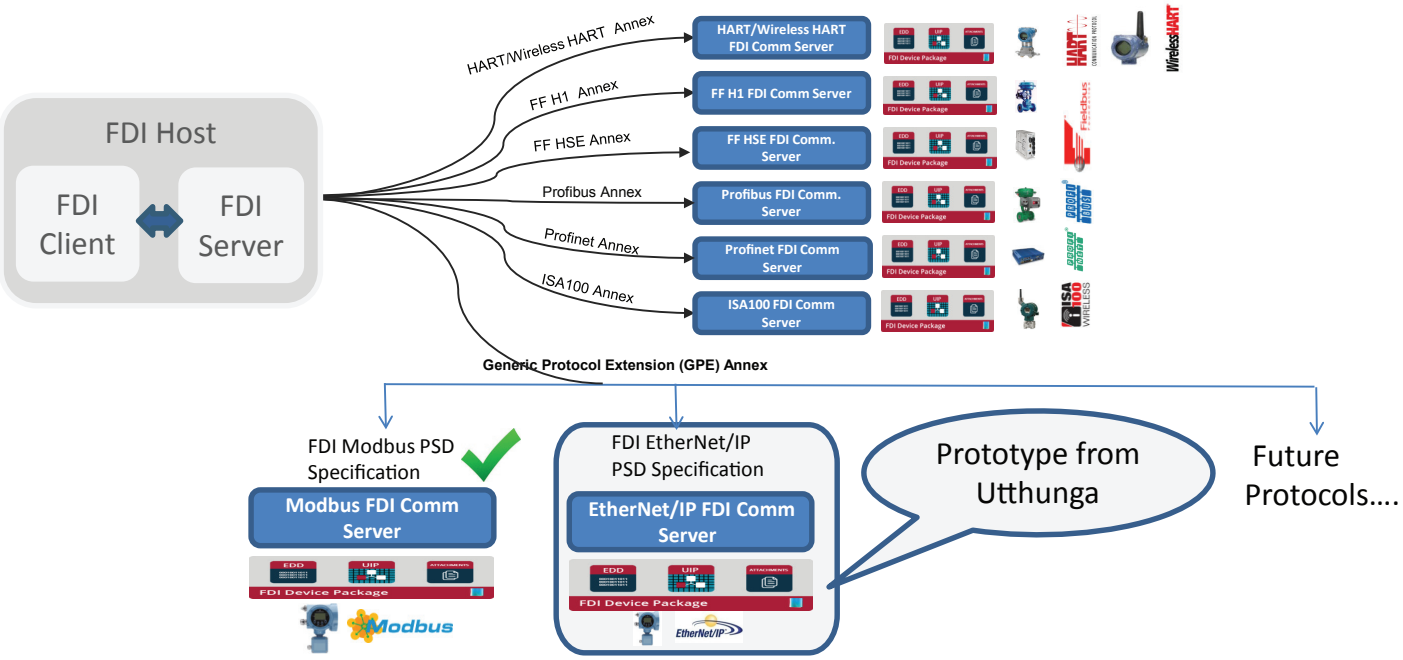

Above picture shows the various Industrial Communication profiles supported by FDI specification. HART/Wireless HART, FF H1 and HSE, Profibus, Profinet,ISA100 using its respective FDI Communication profile specification document. Generic Protocol Extension specification document has been developed which allows support of future protocols.

Modbus support in FDI

Modbus communication protocol has been supported and verified in FDI. FDI Host with support for FDI Communication Server with Generic Protocol Extension will be capable of supporting any communication protocol. This has enabled any Modbus device to be supported in FDI Host using Modbus Device Packages and Modbus FDI Communication Server/Package.

EtherNet/IP support in FDI

Prototype is available for support of EtherNet/IP communication protocol in FDI.

Workflow of EtherNet/IP protocol support in FDI

EtherNet/IP FDI Device Package represents the EtherNet/IP Device and is provided by the EtherNet/IP device vendors. It provides all the elements necessary to integrate EtherNet/IP device to the Automation Host systems.

EtherNet/IP Device Package shall contains mandatory EtherNet/IP EDD file which provides Device Definition, Business Logic and User Interface Description of an EtherNet/IP device to an FDI Server. Complex device functionality or algorithm of the EtherNet/IP could be represented using the optional Programmed User Interface

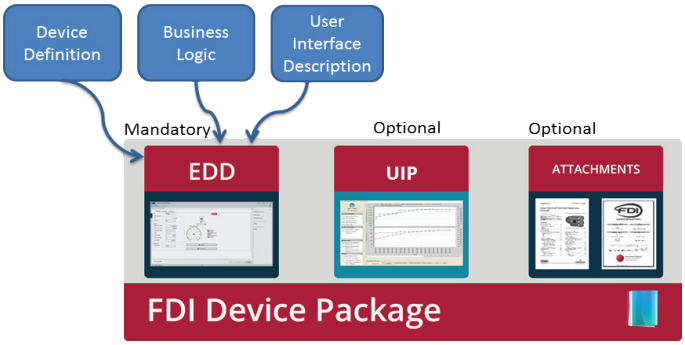

User Interface Plugin (UIP). A UIP can be designed to meet different platform requirements since not all platforms support the same screen sizes and input devices and hence there may be separate UIP representing the same device functionality for different platforms like workstation or mobile etc.

EtherNet/IP Device Packages are imported into the FDI Host system. The Device Definition and Business Logic are used exclusively by an FDI Server and the User Interface Description (UID) is processed by the FDI Server and transferred to the FDI Client. Each EtherNet/IP Device package instance is represented in the FDI Server Information model and provide an access to the FDI Client.

FDI Client is responsible for rendering the User Interface both for UID (User Interface Description) which will be provided in EDD file of EtherNet/IP Device Package and UIP, an optional software component with rich graphical user interface and functionalities. FDI Server provides FDI Client an access to information about Device Instances (FDI Information model) which is driven largely by the EtherNet/IP Device Definition file in FDI Packages. This information can be provided via OPC UA services.

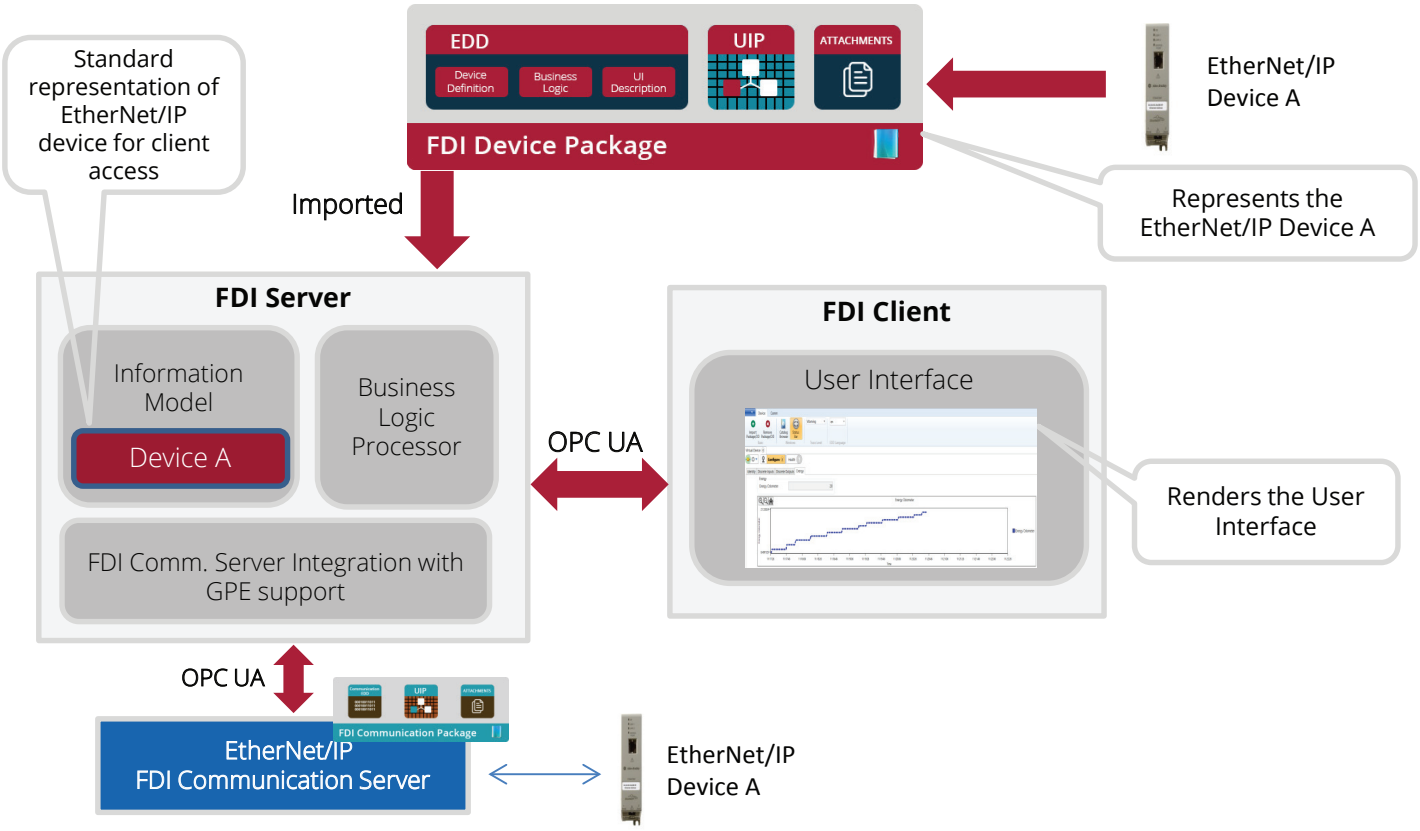

FDI Server is responsible for communicating with underlying **EtherNet/IP device network** via **EtherNet/IP FDI Communication Server** using standard OPC UA interfaces. Any I/O operation invoked on EtherNet/IP device will be passed to the FDI Server which in turn passes it to the EtherNet/IP FDI Communication Server and passes the processed result back to the FDI Client

FDI: Value in Process Automation

FDI Technology can be used as platform for providing the harmonized data to the higher level systems. It standardizes and harmonizes the wealth of information provided by underlying various Industrial network. This enables any FDI compliant OPC UA client to harvest the data from the FDI host in a standardized way and provides the **plant level to enterprise wide connectivity.**

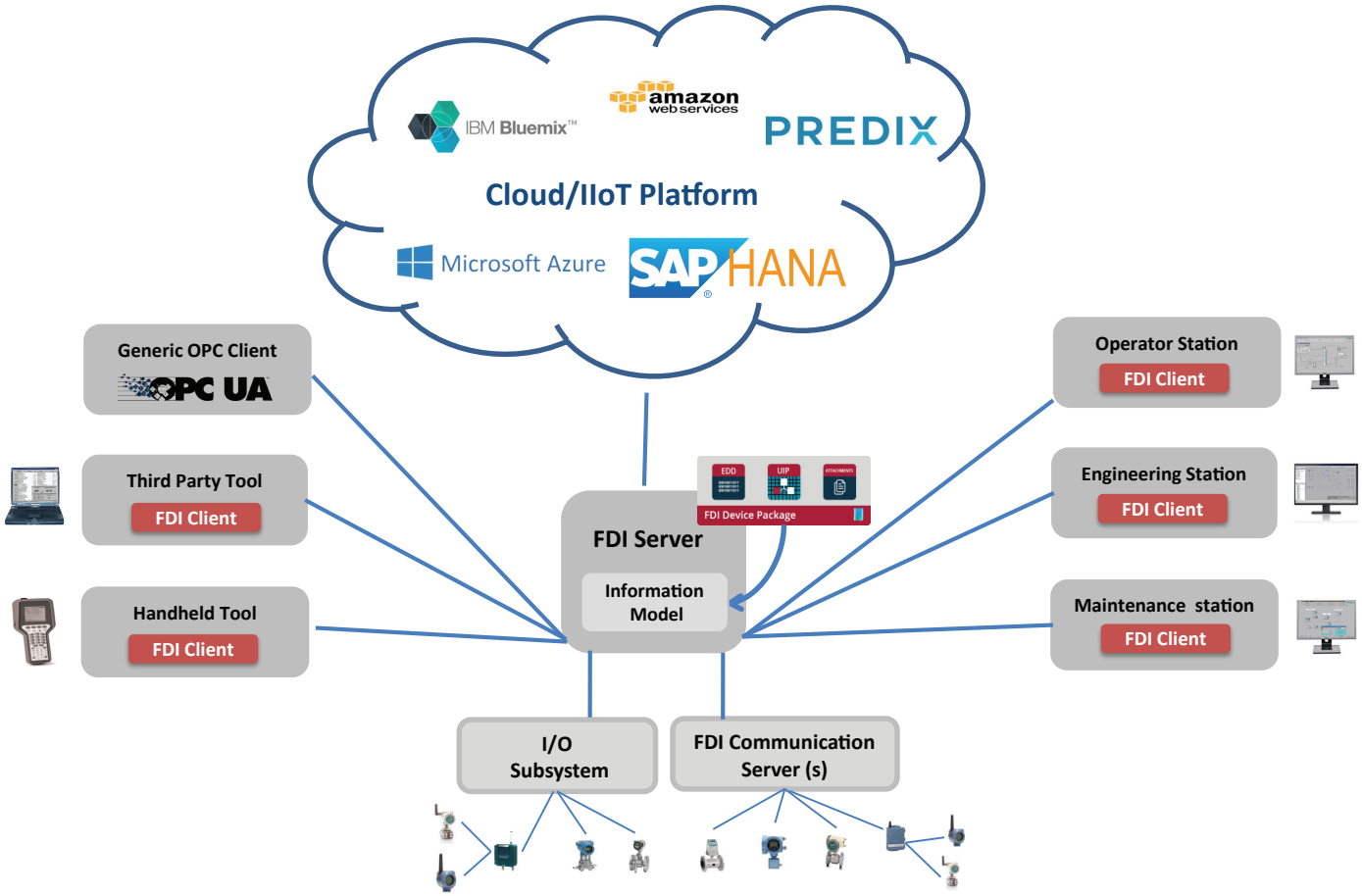

Value proposition of EtherNet/IP support in FDI

End User

Most of the FDI requirements are driven by NAMUR, the "*User Association of Automation Technology in Process Industries*", hence EtherNet/IP combined with FDI brings value addition to the End User community. FDI has got quick market acceptance as the new device integration standard. FDI's User Style guide ensure that plant operators, maintenance engineers will have similar look and feel of the field information irrespective of underlying communication networks like HART, Profibus, Modbus, EtherNet/IP etc. This helps to have the single standardized device management tool for maintaining EtherNet/IP device as well as other communication protocols in the process Industry.

EtherNet/IP Device Supplier

FDI combines the simplicity of the text-based DD technology with the flexibility of FDT. This enables the EtherNet/IP device suppliers to choose the simple EtherNet/IP FDI Device Package with only EtherNet/IP EDD for simple devices and Device Package with multiple UIPs to represent the complex device diagnostics features of complex device. EtherNet/IP device supplier needs to develop EtherNet/IP FDI Device Package in order to support their EtherNet/IP device in the FDI compliant host in the Process Industry. EtherNet/IP support in FDI would increase the market share of the EtherNet/IP devices in the process Industry hence bringing more revenue to the EtherNet/IP device suppliers.

System Suppliers

Any FDI host supporting the GPE (Generic Protocol Extension) will be able to host the EtherNet/IP devices along with Modbus or any future protocol. This reduces the cost and risk of upgrading the host to support new protocols for system suppliers. Also, FDI Communication Server for various protocols could be bought off the shelf, hence it simplifies the integration of new protocol and devices to the host system. Also, FDI's client server architecture with standardized OPC UA interfaces will help the system suppliers in simplifying the device data access in the distributed control system. This also allows the safe and secure access of valuable device data from the generic OPC client that can be maintenance tools or MES (Manufacturing Execution Systems) or ERP (Enterprise Resource Planning) systems.

ODVA and FDI community

Vendor and User community of ODVA will get benefits by having support for another Device Integration standard FDI which allows the simplified and harmonized access of the EtherNet/IP device to the PAM and higher level tools. Vendor and User community of FDI would benefit from having the most promising EtherNet/IP protocol support in their standard. This brings more value and adoption for both of these two standards in the process Industry.

Conclusion

EtherNet/IP Communication protocol with its huge installation base in Hybrid and Discrete Industry has all the potential to become the most accepted Industrial communication protocol in the Process Industry as well. ODVA's initiative of OPI (Optimization for Process Integration) will show its interest in adopting to the special needs of Process Industry.

On the other hand, Most of the FDI requirements are driven by NAMUR, the *"User Association of Automation Technology in Process Industries"* and FDI has received good market acceptance in the process Industry. FDI's flexible architecture to add more protocols without changing the host implementation will help in adding more protocols to the FDI standard in the coming years. As mentioned in **NAMUR's** position paper on *"An Ethernet communication system for the process industry"*, **EtherNet/IP** and **FDI** standard is going to play vital role in the Process Industry in the near future and having the EtherNet/IP support in FDI would benefit End User community, EtherNet/IP device supplier, System Supplier and ODVA as well as FDI community.

Reference

PUB00286R1_ODVA-Optimization-of-Process-Integration
https://www.odva.org/Portals/0/Library/Publications_Numbered/PUB00286R1_ODVA-Optimization- of-Process-Integration.pdf
2015_ODVA_Conference_OPI_FINAL
https://www.odva.org/Portals/0/Library/Conference/ 2015_ODVA_Conference_OPI_FINAL.pdf
Anforderung_Ethernet-NAMUR_2016-02-25_EN
http://www.namur.net/fileadmin/media_www/Dokumente/Anforderung_Ethernet-NAMUR_ 2016-02-25_ EN.pdf
3 Steps to FDI
https://www.fieldcommgroup.org/sites/default/files/ technologies/fdi/ThreeStepsToFDI_v1.0.pdf
Digital Transformation in the Age of IIoT - White Paper from FieldComm Group
https://www.fieldcommgroup.org/sites/default/files/ technologies /Digital%20Transformation%20in% 20the%0Age%20of%20IIoT%20-%20white% 20paper.pdf
FDI-User-Requirements 2011, in addition to NE 105
http://www.namur.net/index.php?id=208&tx_ttnews [tt_news]=218&L=1
EtherNet/IP Specification from ODVA
FDI Specification from FieldComm Group

Copyright

utthunga
Engineering Transformation

Utthunga is niche Industrial Software and Solution provider for diverse domains including Process, Power and Factory Automation. Utthunga is specialized in Industrial standards, specifications, communication protocols and working closely with various Industrial leaders and consortiums.

INDIA
CORPORATE HEADQUARTER

Utthunga Technologies Pvt Ltd
8/1 Balaji Mansion,
Phase 3 JP Nagar
Bannerghatta Road,
Bangalore - 560 076, +91-80-4654 3000

USA

Utthunga LLC
28219 John Clyde Drive
Katy TX 77494
+ 1-303-459-7941

GERMANY

Utthunga GmbH
Dieburger Str. 78
64287 Darmstadt
+ 49-3831-213-3000

www.utthunga.com | contact@utthunga.com